EIN3241: Human Factors and Ergonomics
Spring 2026

Practice Final Exam

Instructor: Dr. Jad Atweh

Part I — Multiple Choice and Fill in the Blank (20 points)

1. What key factor during WWII triggered the scientific expansion of HF/E?
a. Emergence of labor unions demanding safer work
b. Evidence that better tools increased productivity
c. Frequent human errors due to poorly designed military equipment
d. Advances in aerospace dominance requiring automation
e. Rise of repetitive strain injuries in factories

2. The below term describes the time required for a qualified worker to perform a job using a standard method under normal conditions:
a. Working time
b. Normal time
c. Standard time
d. Performance time
e. Elemental time

3. A job best suited for a time study usually:
a. Requires group collaboration
b. Involves manual labor and repetitive cycles
c. Is done only once per week
d. Must use advanced technology
e. Must be unpredictable in duration

4. In rating performance using the Westinghouse system, which of the following is **not** a factor?
a. Skill
b. Effort
c. Consistency
d. Posture
e. Conditions

5. Allowances account for all the following **except**:
a. Fatigue
b. Personal needs

c. Unavoidable delays
d. Normal time
e. Setup and preparation

6. 1 TMU equals:
a. 1 minute
b. 0.6 minutes
c. 0.036 seconds
d. 1.67 seconds
e. 0.1 seconds

7. The MTM motion element describing rotating the hand is:
a. Reach
b. Move
c. Grasp
d. Turn
e. Release

8. The principle that important displays should attract attention is:
a. Proximity compatibility
b. Redundancy gain
c. Salience compatibility
d. Visual momentum
e. Avoid resource competition

9. When designing safety alarms in a factory, a 15 dB increase above ambient noise is recommended to overcome:
a. Pitch masking
b. Temporary threshold shift
c. Loudness scaling
d. Sensorial-neural loss
e. Conductive impairment

10. Redundancy gain suggests:
a. Use only one signal dimension
b. Duplicate controls to reduce cost
c. Present information using multiple cues
d. Avoid discriminable features
e. Remove colors from displays

11. Minimizing information access cost means:
a. Fewer controls must be used
b. Frequently used items should be easy to reach
c. Displays should follow user expectations

d. Remove rarely used controls
e. Place all items close together

12. Avoiding absolute judgment tasks means:
a. Using more color levels
b. Requiring users to interpret one sensory dimension
c. Limiting the number of coded levels
d. Eliminating labels from displays
e. Using only auditory alarms

13. Peripheral vision is wider in the:
a. Vertical plane
b. Horizontal plane
c. Central field
d. Fovea only

14. A "Poor" coupling in lifting tasks refers to:
a. An object that allows hands to wrap around it
b. An object that is difficult to be grasped, with no handles or cutouts.
c. An object that has perfect load symmetry
d. An object that allows for horizontal lifting only
e. An object that is lifting below knuckle height only

15. A fatigued radiologist examining X-rays is MOST likely to experience:
a. Increased hits with decreased correct rejections
b. Lower sensitivity, causing increased misses
c. Increased β due to conservative bias
d. Better detectability due to expectancy effects
e. Faster bottom-up detection due to reduced scanning time

16. According to Fitts' Law, movement time will be longest when control targets are:
a. Large and far
b. Small and far
c. Small and near
d. Uniformly spaced but similar in color
e. Coded using redundant cues

17. A major limitation of A/B testing when used for HF/E evaluation is that:
a. It does not measure user performance quantitatively
b. It only works in laboratory settings
c. It identifies which design performs better but not why
d. It requires subjective workload data
e. It cannot be used on software or web interfaces

18. Ergonomic problems related to reach distances and body dimensions are classified as:
a. Musculoskeletal
b. Psychomotor
c. Anthropometric
d. Organizational

19. Two ROC curves have identical hit rates but differing false alarm rates. The curve with the lower P(FA) indicates:
a. Higher sensitivity (d')
b. Lower sensitivity but higher β
c. Equal d' but different noise distributions
d. Unreliable response criteria

20. Which of the following is an advantage of a seated work posture?
a. Greater physiological load
b. Improved blood circulation and less fatigue development
c. Better mobility for extended reaches
d. Enhanced ability to apply downward force

Part II — Short-Answer Questions (15 points)

1. Drinking water fountains can be more ergonomically designed. Consider designing a NON-ADJUSTABLE drinking water fountain specifically for an adult population.

a) (2 points) What percentile and anthropometric measure would you use to determine an appropriate height for the control (e.g. button) used to regulate water flow?

b) (2 points) What percentile and anthropometric measure would you use to determine an appropriate height for the actual water fountain from which water flows?

2. (4 points) One of the features to consider in designing an ergonomic valve wrench is the length of the handle (shown in the image below). Determine what the appropriate length of the handle should be, given that the average and standard deviation of the population's hand breadth is 10 cm and 1.8 cm, respectively.

3. (1.5 points) What is the rule of thumb for determining work surface height during standing?

4. (2 points) One of the research approaches used for addressing manual material handling (MMH) injuries is the "psychophysical approach." Explain what this approach entails.

5. (3.5 points) Take a look at the picture below. It is supposedly an "ergonomic" workstation for kids. The fact that it is smaller does make it more ergonomic. However, we have learned in class the different ergonomic design considerations for seated workstations. With these design considerations in mind, identify 7 ergonomic problems in this workstation.

Pint-Sized Ergonomics

Now for kids too: Computer furniture that's ergonomically correct.

Part III — Exercises (65 points)

Problem 1 (10 points)

Assume that a worker is standing in front of a table with nothing in his hands. On the table, there is a stack of papers on one side and a stapler on another side that is mixed together with other office items in a basket.

Using the breakdown shown in the table below, fill in the MTM-1 basic motions, their symbols, their times in TMU, and finally find the standard time of this job in seconds. Use your best estimates for all the distances and weights. State any assumptions below your table.

Left hand description	**Right hand description**
	Get the stapler
Put the papers in the stapler	Align the stapler exactly to the top left of the papers
	Staple the papers
	Open the drawer under the table
	Put the stapler anywhere in the drawer and close the drawer

Problem 2 (10 points)

You performed a time study for a factory operation and obtained the following table

Element 1 (min)	**Element 2 (min)**	**Element 3 (min)**
22	15	-
23	20	4
21	21	-
20	18	-
21	19	3

Assume that you gave the participant a rating of 100% and used a 9% total allowance only. Assume that one operator produced 14 pieces in one day. Also assume that a standard hour plan is adopted for this operation and that the wage rate is $10/hr.

a) What are the operator earned hours for this operation?

b) What is the operator efficiency if it really takes 8 hours to produce 14 pieces?

c) What is the direct labor cost for this operation for this day? Assume that this worker is the only one working on this operation.

Problem 3 (7 points)

During the course of a workday, a machine operator is simultaneously exposed to sound from three metal presses in his work cell. The measured levels of noise exposure in dB for each press are listed in the table below.

Machine	**dB Level**
Machine A	88
Machine B	87
Machine C	86

a) Considering the dB levels, calculate the permissible noise exposure limit for each machine.

b) Assume that exposure to each machine are as follows: Machine A = 5 hrs; Machine B = 2 hrs; Machine C = 1 hr. What is the accumulated noise dose for the worker?

c) Given the calculated dosage, what is the 8-hr. time-weighted average (TWA) exposure for the worker?

d) Does the calculated TWA exceed the OSHA maximum permissible limit for an 8-hour workday?

Problem 4 (13 points)

Below is a data set of observations on human performance in a Fitts' task. It includes the amplitude of motion, the target size and motion times.

MT (sec.)	**A (in.)**	**W (in.)**
1.5	8	4
2.5	15	4
3.0	18	2
3.5	20	1.5
4.5	30	1

a) Calculate the Index of Difficulty (ID), rounded to the nearest integer, for each task condition.

b) The linear two-parameter motor performance model for this operator is given by:

$$\boxed{MT \approx 0.2 + 0.7\,ID \text{ (seconds)}}.$$

Below are the linear two-parameter models for Operators 2 and 3. Who is the most productive operator among the three operators and how do you know this? Which operator will produce the shortest MTs and why? (Be specific about the reason.)

Operator	**Two-parameter model**
Operator 2	MT = 1 + 2*ID
Operator 3	MT = 2 + 3*ID

c) What two (2) suggestions would you make if you wanted to reduce total movement time?

Problem 5 (12 points)

A barista was trying to see whether a customer could distinguish between regular iced coffee and the fancier "cold-brew" coffee (the target in this example). There were 20 trials, divided evenly between the iced-coffee and the cold-brew coffee (10 each). The customer indicated that he drank cold-brew coffee in 11 of the trials. However, only 9 of these trials were actually cold-brew coffee.

(a) (5 pts) Calculate the hit, miss, false alarm, and correct rejection rates.

(b) (7 pts) What are the d' and β of the customer?

Problem 6 (13 points)

A worker is required to move tote boxes from an incoming flat conveyor to an outgoing J-hook at a rate of approximately three boxes per minute. Each box weighs 15 lbs, and this task is performed continuously for 8 hours per day. The worker can comfortably grasp the box, and it is assumed that the horizontal distance between the ankles and the hands is 16 in and remains relatively constant during the lift. During the transfer to the conveyor, it is estimated that the worker must twist their torso approximately 80°.

Compute the Lifting Index (LI) for this task. What conclusions can you make about the job design?

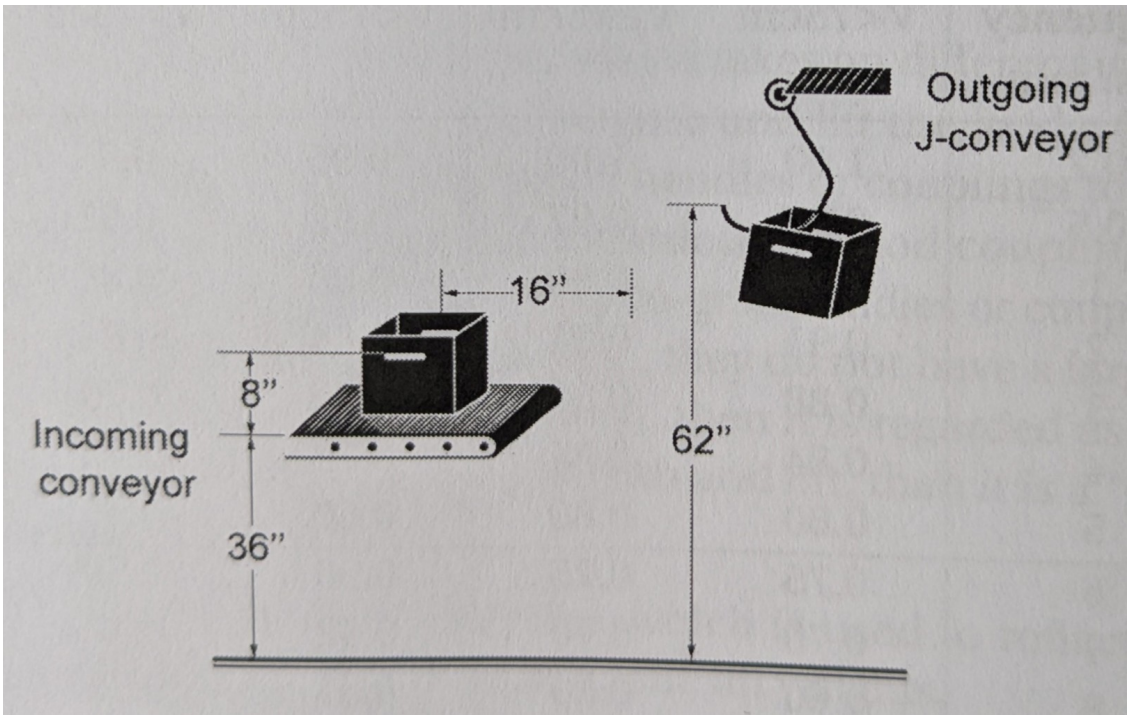

Formula Sheet

Descriptive Statistics

$$Mean = \frac{\sum_{i=1}^{n} x_i}{n}$$

$$SD = \sqrt{\frac{\sum_{i=1}^{n}(x_i - m)^2}{n-1}}$$

Percentile:

$$x_p = m + z_p\, SD$$

Combining Distributions (e.g., X+Y)

$$\mu_A = \mu_X + \mu_Y$$

$$\sigma_A = \sqrt{\sigma_X^2 + \sigma_Y^2 + 2\rho\, \sigma_X \sigma_Y}$$

Moment About the Origin

$$M_x = \sum_{i=1}^{n} m_i x_i$$

Center of Mass

$$x = \frac{1}{M} \sum_{i=1}^{n} m_i x_i$$

Parallel Axis Theorem

$$I_0 = \frac{m}{2}\rho^2 + \frac{m}{2}\rho^2 = m\rho^2$$

MoI about point P

$$I_p = mx^2 + I_0$$

Basal Metabolism (BM) in SI Units

$$BM_{\text{men}}(\text{kcal}) = 10 \cdot \text{Weight (kg)} + 6.25 \cdot \text{Height (cm)} - 5 \cdot \text{Age (years)} + 5$$

$$BM_{\text{women}}(\text{kcal}) = 10 \cdot \text{Weight (kg)} + 6.25 \cdot \text{Height (cm)} - 5 \cdot \text{Age (years)} - 161$$

Basal Metabolism in US Units

$$BM_{\text{men}}(\text{kcal}) = 4.536 \cdot \text{Weight (lb)} + 15.88 \cdot \text{Height (in)} - 5 \cdot \text{Age (years)} + 5$$

$$BM_{\text{women}}(\text{kcal}) = 4.536 \cdot \text{Weight (lb)} + 15.88 \cdot \text{Height (in)} - 5 \cdot \text{Age (years)} - 161$$

Activity Metabolism (AM) Formula

AM for Men (kcal)

$$AM_{\text{men}}(\text{kcal}) = \frac{T\,(0.6309\,HR - 0.1988\,W + 0.2017\,A - 55.0969)}{4.184}$$

AM for Women (kcal)

$$AM_{\text{women}}(\text{kcal}) = \frac{T\,(0.4472\,HR - 0.1263\,W + 0.074\,A - 20.4022)}{4.184}$$

Where:

$$T = \text{Duration of exercise (minutes)}$$
$$HR = \text{Average heart rate (bpm)}$$
$$W = \text{Weight (kg)}$$
$$A = \text{Age (years)}$$

Estimated Maximum Heart Rate

$$HR_{\text{max}} = 220 - \text{Age (years)}$$

VO_2 Max Prediction (Based on Resting HR)

$$VO_2\,\text{max} = 15.3 \times \frac{HR_{\text{max}}}{HR_{\text{resting}}}$$

Heart Rate Reserve (bpm)

$$HR_{\text{reserve}} = HR_{\text{max}} - HR_{\text{resting}}$$

Percent of Heart Rate Reserve

$$\%\,HR_{\text{reserve}} = \frac{HR_{\text{activity}} - HR_{\text{resting}}}{HR_{\text{max}} - HR_{\text{resting}}} \times 100$$

Work–Rest Cycles

Case 1: K < S

$$R_T = 0$$

Case 2: S ≤ K < 2S

$$R_T = \frac{\left(\frac{K}{S} - 1\right) \times 100 + \frac{T(K-S)}{K-BM}}{2}$$

Case 3: K ≥ 2S

$$R_T = \frac{T(K-S)}{K-BM} \times 1.11$$

Where:

$$K = \text{Energy cost of work (kcal/min)}$$
$$S = \text{Accepted standard (4 kcal/min for females, 5 kcal/min for males)}$$
$$R_T = \text{Allowed rest time (min)}$$
$$T = \text{Total expected task duration (min)}$$
$$BM = \text{Basal metabolism (kcal/min)}$$

$$\text{Reflectance (\%)} = \frac{\text{Luminance (fl)}}{\text{Illuminance (fc)}}$$

$$\text{Visual Angle [°]} = 2\arctan\left(\frac{H}{2D}\right)$$

Small-Angle Approximation (for angles < 10°)

$$VA\ (\text{min}) = \frac{3438\,H}{D}$$

Contrast Sensitivity

$$\text{Contrast Sensitivity} = \frac{1}{C_M}$$

Combined Noise Exposure

$$SPL_{\text{Tot}} = 10\log_{10}\left(\sum_{i=1}^{n} 10^{\frac{SPL_i}{10}}\right)$$

Noise Exposure Limit

$$L_T \text{ (hours)} = \frac{8}{2^{\frac{L_i - 90}{5}}}$$

Noise Dose

$$D = \sum \frac{T_i}{L_T}$$

Time-Weighted Average

$$TWA = 16.61 \log_{10}(D) + 90$$

Serial Search Model (Conjunction Search)

$$T = \frac{N \times I}{2}$$

Where:

- T = average time to find target
- N = total number of items in search field
- I = average inspection time for each item (assume constant)

d':

$$d' = Z(H) - Z(FA)$$

Response Bias:

$$\beta = \frac{\text{Ordinate}(Z(p(H)))}{\text{Ordinate}(Z(p(FA)))}$$

Or alternatively:

$$\beta = e^{0.5[Z(p(FA))^2 - Z(p(H))^2]}$$

Hick-Hyman Law

$$RT = a + b \log_2 N$$

Fitts' Law

$$MT = a + b \log_2 \left(\frac{2A}{W} \right)$$

Throughput

$$TP = \frac{ID}{MT}$$

Time Studies

The acceptable number of cycles n is:

$$n = \left(\frac{tS}{k\bar{x}}\right)^2$$

If you rate each element

$$NT_n = ET_n \times \frac{R_n}{100}$$

$$NT = NT_1 + \left(\frac{f_2}{f_1}\right) NT_2 + \cdots + \left(\frac{f_n}{f_1}\right) NT_n$$

If you rate the operation as a whole

$$\overline{ET} = ET_1 + \left(\frac{f_2}{f_1}\right) ET_2 + \cdots + \left(\frac{f_n}{f_1}\right) ET_n$$

$$NT = \overline{ET} \times \frac{R}{100}$$

f_1 should have the highest frequency

Standard Time

$$\text{Standard Time} = \text{Normal Time}\left(1 + \frac{\text{Allowance\%}}{100}\right)$$

Work Sampling

$$n = Z^2_{\alpha/2}\left(\frac{\hat{p}(1-\hat{p})}{l^2}\right)$$

$$\text{Element time}(ET) = \frac{T}{P} \times p$$

Lifting Index (LI)

$$LI = \frac{L}{RWL}$$

Normal & Ordinates Tables

Standard Normal Probabilities

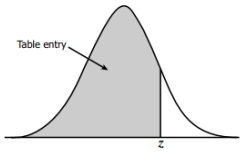

Table entry for z is the area under the standard normal curve to the left of z.

z	.00	.01	.02	.03	.04	.05	.06	.07	.08	.09
0.0	.5000	.5040	.5080	.5120	.5160	.5199	.5239	.5279	.5319	.5359
0.1	.5398	.5438	.5478	.5517	.5557	.5596	.5636	.5675	.5714	.5753
0.2	.5793	.5832	.5871	.5910	.5948	.5987	.6026	.6064	.6103	.6141
0.3	.6179	.6217	.6255	.6293	.6331	.6368	.6406	.6443	.6480	.6517
0.4	.6554	.6591	.6628	.6664	.6700	.6736	.6772	.6808	.6844	.6879
0.5	.6915	.6950	.6985	.7019	.7054	.7088	.7123	.7157	.7190	.7224
0.6	.7257	.7291	.7324	.7357	.7389	.7422	.7454	.7486	.7517	.7549
0.7	.7580	.7611	.7642	.7673	.7704	.7734	.7764	.7794	.7823	.7852
0.8	.7881	.7910	.7939	.7967	.7995	.8023	.8051	.8078	.8106	.8133
0.9	.8159	.8186	.8212	.8238	.8264	.8289	.8315	.8340	.8365	.8389
1.0	.8413	.8438	.8461	.8485	.8508	.8531	.8554	.8577	.8599	.8621
1.1	.8643	.8665	.8686	.8708	.8729	.8749	.8770	.8790	.8810	.8830
1.2	.8849	.8869	.8888	.8907	.8925	.8944	.8962	.8980	.8997	.9015
1.3	.9032	.9049	.9066	.9082	.9099	.9115	.9131	.9147	.9162	.9177
1.4	.9192	.9207	.9222	.9236	.9251	.9265	.9279	.9292	.9306	.9319
1.5	.9332	.9345	.9357	.9370	.9382	.9394	.9406	.9418	.9429	.9441
1.6	.9452	.9463	.9474	.9484	.9495	.9505	.9515	.9525	.9535	.9545
1.7	.9554	.9564	.9573	.9582	.9591	.9599	.9608	.9616	.9625	.9633
1.8	.9641	.9649	.9656	.9664	.9671	.9678	.9686	.9693	.9699	.9706
1.9	.9713	.9719	.9726	.9732	.9738	.9744	.9750	.9756	.9761	.9767
2.0	.9772	.9778	.9783	.9788	.9793	.9798	.9803	.9808	.9812	.9817
2.1	.9821	.9826	.9830	.9834	.9838	.9842	.9846	.9850	.9854	.9857
2.2	.9861	.9864	.9868	.9871	.9875	.9878	.9881	.9884	.9887	.9890
2.3	.9893	.9896	.9898	.9901	.9904	.9906	.9909	.9911	.9913	.9916
2.4	.9918	.9920	.9922	.9925	.9927	.9929	.9931	.9932	.9934	.9936
2.5	.9938	.9940	.9941	.9943	.9945	.9946	.9948	.9949	.9951	.9952
2.6	.9953	.9955	.9956	.9957	.9959	.9960	.9961	.9962	.9963	.9964
2.7	.9965	.9966	.9967	.9968	.9969	.9970	.9971	.9972	.9973	.9974
2.8	.9974	.9975	.9976	.9977	.9977	.9978	.9979	.9979	.9980	.9981
2.9	.9981	.9982	.9982	.9983	.9984	.9984	.9985	.9985	.9986	.9986
3.0	.9987	.9987	.9987	.9988	.9988	.9989	.9989	.9989	.9990	.9990
3.1	.9990	.9991	.9991	.9991	.9992	.9992	.9992	.9992	.9993	.9993
3.2	.9993	.9993	.9994	.9994	.9994	.9994	.9994	.9995	.9995	.9995
3.3	.9995	.9995	.9995	.9996	.9996	.9996	.9996	.9996	.9996	.9997
3.4	.9997	.9997	.9997	.9997	.9997	.9997	.9997	.9997	.9997	.9998

$\phi(z) = \frac{1}{\sqrt{2\pi}} e^{-\frac{1}{2}z^2}$, for $0 \le z \le 4.99, \phi(-z) = \phi(z)$

z	0.00	0.01	0.02	0.03	0.04	0.05	0.06	0.07	0.08	0.09
0.0	0.3989	0.3989	0.3989	0.3988	0.3986	0.3984	0.3982	0.3980	0.3977	0.3973
0.1	0.3970	0.3965	0.3961	0.3956	0.3951	0.3945	0.3939	0.3932	0.3925	0.3918
0.2	0.3910	0.3902	0.3894	0.3885	0.3876	0.3867	0.3857	0.3847	0.3836	0.3825
0.3	0.3814	0.3802	0.3790	0.3778	0.3765	0.3752	0.3739	0.3725	0.3712	0.3697
0.4	0.3683	0.3668	0.3653	0.3637	0.3621	0.3605	0.3589	0.3572	0.3555	0.3538
0.5	0.3521	0.3503	0.3485	0.3467	0.3448	0.3429	0.3410	0.3391	0.3372	0.3352
0.6	0.3332	0.3312	0.3292	0.3271	0.3251	0.3230	0.3209	0.3187	0.3166	0.3144
0.7	0.3123	0.3101	0.3079	0.3056	0.3034	0.3011	0.2989	0.2966	0.2943	0.2920
0.8	0.2897	0.2874	0.2850	0.2827	0.2803	0.2780	0.2756	0.2732	0.2709	0.2685
0.9	0.2661	0.2637	0.2613	0.2589	0.2565	0.2541	0.2516	0.2492	0.2468	0.2444
1.0	0.2420	0.2396	0.2371	0.2347	0.2323	0.2299	0.2275	0.2251	0.2227	0.2203
1.1	0.2179	0.2155	0.2131	0.2107	0.2083	0.2059	0.2036	0.2012	0.1989	0.1965
1.2	0.1942	0.1919	0.1895	0.1872	0.1849	0.1826	0.1804	0.1781	0.1758	0.1736
1.3	0.1714	0.1691	0.1669	0.1647	0.1626	0.1604	0.1582	0.1561	0.1539	0.1518
1.4	0.1497	0.1476	0.1456	0.1435	0.1415	0.1394	0.1374	0.1354	0.1334	0.1315
1.5	0.1295	0.1276	0.1257	0.1238	0.1219	0.1200	0.1182	0.1163	0.1145	0.1127
1.6	0.1109	0.1092	0.1074	0.1057	0.1040	0.1023	0.1006	0.09893	0.09728	0.09566
1.7	0.09405	0.09246	0.09089	0.08933	0.08780	0.08628	0.08478	0.08329	0.08183	0.08038
1.8	0.07895	0.07754	0.07614	0.07477	0.07341	0.07206	0.07074	0.06943	0.06814	0.06687
1.9	0.06562	0.06438	0.06316	0.06195	0.06077	0.05959	0.05844	0.05730	0.05618	0.05508
2.0	0.05399	0.05292	0.05186	0.05082	0.04980	0.04879	0.04780	0.04682	0.04586	0.04491
2.1	0.04398	0.04307	0.04217	0.04128	0.04041	0.03955	0.03871			

PMTS Tables

Table 13.1 Summary of MTM-1 Data

Table I—Reach—R							
Distance Moved (in)	Time (TMU) A	B	C or D	E	Hand in Motion A	B	Case and Description
1/2 or less	2.0	2.0	2.0	2.0	1.6	1.6	A Reach to object in fixed location, or to object in other hand or on which other hand rests.
1	2.5	2.5	3.6	2.4	2.3	2.3	
2	4.0	4.0	5.9	3.8	3.5	2.7	
3	5.3	5.3	7.3	5.3	4.5	3.6	
4	6.1	6.4	8.4	6.8	4.9	4.3	B Reach to single object in location which may vary slightly from cycle to cycle.
5	6.5	7.8	9.4	7.4	5.3	5.0	
6	7.0	8.6	10.1	8.0	5.7	5.7	
7	7.4	9.3	10.8	8.7	6.1	6.5	C Reach to object jumbled with other objects in a group so that search and select occur.
8	7.9	10.1	11.5	9.3	6.5	7.2	
9	8.3	10.8	12.2	9.9	6.9	7.9	
10	8.7	11.5	12.9	10.5	7.3	8.6	D Reach to a very small object or where accurate grasp is required.
12	9.6	12.9	14.2	11.8	8.1	10.1	
14	10.5	14.4	15.6	13.0	8.9	11.5	
16	11.4	15.8	17.0	14.2	9.7	12.9	E Reach to indefinite location to get hand in position for body balance or next motion or out of way.
18	12.3	17.2	18.4	15.5	10.5	14.4	
20	13.1	18.6	19.8	16.7	11.3	15.8	
22	14.0	20.1	21.2	18.0	12.1	17.3	
24	14.9	21.5	22.5	19.2	12.9	18.8	
26	15.8	22.9	23.9	20.4	13.7	20.2	
28	16.7	24.4	25.3	21.7	14.5	21.7	
30	17.5	25.8	26.7	22.9	15.3	23.2	

Table II—Move—M								
Distance Moved (in)	Time (TMU) A	B	C	Hand in Motion B	Wt. Allowance Wt. (lb) up to	Factor	Constant (TMU)	Case and Description
1/2 or less	2.0	2.0	2.0	1.7	2.5	0	0	A Move object to other hand or against stop.
1	2.5	2.9	3.4	2.3				
2	3.6	4.6	5.2	2.9	7.5	1.06	2.2	
3	4.9	5.7	6.7	3.6				
4	6.1	6.9	8.0	4.3	12.5	1.11	3.9	
5	7.3	8.0	9.2	5.0				
6	8.1	8.9	10.3	5.7	17.5	1.17	5.6	
7	8.9	9.7	11.1	6.5				
8	9.7	10.6	11.8	7.2				B Move object to approximate or indefinite location.
9	10.5	11.5	12.7	7.9	22.5	1.22	7.4	
10	11.3	12.2	13.5	8.6				
12	12.9	13.4	15.2	10.0	27.5	1.28	9.1	
14	14.4	14.6	16.9	11.4				
16	16.0	15.8	18.7	12.8	32.5	1.33	10.8	
18	17.6	17.0	20.4	14.2				
20	19.2	18.2	22.1	15.6	37.5	1.39	12.5	
22	20.8	19.4	23.8	17.0				
24	22.4	20.6	25.5	18.4	42.5	1.44	14.3	C Move object to exact location.
26	24.0	21.8	27.3	19.8				
28	25.5	23.1	29.0	21.2	47.5	1.50	16.0	
30	27.1	24.3	30.7	22.7				

Table III—Turn and Apply Pressure—T and AP											
	Time TMU for Degrees Turned										
Weight	30°	45°	60°	75°	90°	105°	120°	135°	150°	165°	180°
Small—0 to 2 lb	2.8	3.5	4.1	4.8	5.4	6.1	6.8	7.4	8.1	8.7	9.4
Medium—2.1 to 10 lb	4.4	5.5	6.5	7.5	8.5	9.6	10.6	11.6	12.7	13.7	14.8
Large—10.1 to 35 lb	8.4	10.5	12.3	14.4	16.2	18.3	20.4	22.2	24.3	26.1	28.2

Apply Pressure Case A—10.6 TMU. Apply Pressure Case B—16.2 TMU

Table IV—Grasp—G		
Case	Time (TMU)	Description
1A	2.0	**Pick Up Grasp**—Small, medium or large object by itself, easily grasped.
1B	3.5	Very small object or object lying close against a flat surface.
1C1	7.3	Interference with grasp on bottom and one side of nearly cylindrical object. Diameter larger than $^1/_2$″.
1C2	8.7	Interference with grasp on bottom and one side of nearly cylindrical object. Diameter $^1/_4$″ to $^1/_2$″.
1C3	10.8	Interference with grasp on bottom and one side of nearly cylindrical object. Diameter less than $^1/_4$″.
2	5.6	**Regrasp.**
3	5.6	**Transfer Grasp.**
4A	7.3	Object jumbled with other objects so search and select occur. Larger than 1″ × 1″ × 1″.
4B	9.1	Object jumbled with other objects so search and select occur. $^1/_4$″ × $^1/_4$″ × $^1/_8$″ to 1″ × 1″ × 1″.
4C	12.9	Object jumbled with other objects so search and select occur. Smaller than $^1/_4$″ × $^1/_4$″ × $^1/_8$″.
5	0	Contact, sliding or hook grasp.

Table V—Position*—P				
Class of Fit		Symmetry	Easy to Handle	Difficult to Handle
1—Loose	No pressure required.	S	5.6	11.2
		SS	9.1	14.7
		NS	10.4	16.0
2—Close	Light pressure required.	S	16.2	21.8
		SS	19.7	25.3
		NS	21.0	26.6
3—Exact	Heavy pressure required.	S	43.0	48.6
		SS	46.5	52.1
		NS	47.8	53.4

*Distance moved to engage—1″ or less.

Table VI—Release—RL		
Case	Time (TMU)	Description
1	2.0	Normal release performed by opening fingers as independent motion.
2	0	Contact release.

Table 13.1 (continued)

Table VII—Disengage—D		
Class of Fit	**Easy to Handle**	**Difficult to Handle**
1—Loose—Very slight effort, blends with subsequent move.	4.0	5.7
2—Close—Normal effort, slight recoil.	7.5	11.8
3—Tight—Considerable effort, hand recoils markedly.	22.9	34.7

Table VIII—Eye Travel Time and Eye Focus—ET and EF

$$\text{Eye Travel Time} = 15.2 \times \frac{T}{D}\ \text{TMU, with a maximum value of 20 TMU.}$$

where T = the distance between points from and to which the eye travels.
D = the perpendicular distance from the eye to the line of travel T.

Eye Focus Time = 7.3 TMU.

Table IX—Body, Leg, and Foot Motions			
Description	**Symbol**	**Distance**	**Time TMU**
Foot Motion—Hinged at ankle.	FM	Up to 4″	8.5
With heavy pressure.	FMP		19.1
Leg or Foreleg Motion	LM—	Up to 6″	7.1
		Each add'l. inch	1.2
Sidestep—Case 1—Complete when leading leg contacts floor.	SS-C1	Less than 12″	Use REACH or MOVE time
		12″	17.0
		Each add'l. inch	0.6
Case 2—Lagging leg must contact floor before next motion can be made.	SS-C2	12″	34.1
		Each add'l. inch	1.1
Bend, Stoop, or Kneel on One Knee.	B, S, KOK		29.0
Arise.	AB, AS, AKOK		31.9
Kneel on Floor—Both Knees.	KBK		69.4
Arise.	AKBK		76.7
Sit.	SIT		34.7
Stand from Sitting Position.	STD		43.4
Turn Body 45 to 90 degrees—			
Case 1—Complete when leading leg contacts floor.	TBC1		18.6
Case 2—Lagging leg must contact floor before next motion can be made.	TBC2		37.2
Walk.	W-FT.	Per foot	5.3
Walk.	W-P	Per pace	15.0

Table X—Simultaneous Motions

Reach			Move				Grasp			Position			Disengage			
A, E	B	C, D	A, Bm	B	C	G1A G2 G5	G1B G1C	G4	P1S	P1SS P2S	P1NS P2SS P2NS	D1E D1D	D2	Case	Motion
		*W|O	*W|O	*W|O	*W|O		*W|O	*W|O	**E|D	**E|D	**E|D		**E|D		
□	□	□□	□□	□□	××□	□	□□	□□	□□	□×	××	□	□□	A, E	Reach
□	□	□×	□□	□×	×■□	□	□×	×■	××	×■	■■	□	□×	B	Reach
		□×	×■	×■	■■□	□	×■	■■	■■	■■	■■	×	■■	C, D	Reach
			□□	□□	□□□	□	□□	□□	□□	□×	××	□	□□	A, Bm	Move
				□□	□□□	□	□×	×■	××	×■	■■	□	□×	B	Move
					×■□	□	×■	■■	■■	■■	■■	×	■■	C	Move
						□	□□	□□	□□	□■	■■	□	■■	G1A, G2, G5	Grasp
							■■	×■	■■	■■	■■	■	■■	G1B, G1C	Grasp
								■■	■■	■■	■■	■	■■	G4	Grasp
									×■	■■	■■	■	■■	P1S	Position
										■■	■■	■	■■	P1SS, P2S	Position
											■■	■	■■	P1NS, P2SS, P2NS	Position
												□	□□	D1E, D1D	Disengage
													□□	D2	Disengage

□ = EASY to perform simultaneously.
× = Can be performed simultaneously with PRACTICE.
■ = DIFFICULT to perform simultaneously even after long practice. Allow both times.

MOTIONS NOT INCLUDED IN ABOVE TABLE
TURN—Normally EASY with all motions except when TURN is controlled or with DISENGAGE.
APPLY PRESSURE—May be EASY, PRACTICE, or DIFFICULT. Each case must be analyzed.
POSITION—Class 3—Always DIFFICULT.
DISENGAGE—Class 3—Normally DIFFICULT.
RELEASE—Always EASY.
DISENGAGE—Any class may be DIFFICULT if care must be exercised to avoid injury or damage to object.
*W = Within the area of normal vision.
O = Outside the area of normal vision.
**E = EASY to handle.
D = DIFFICULT to handle.

Source: MTM Association for Standards and Research, Fair Lawn, New Jersey.

NIOSH LE Tables

Table 1: NIOSH Equation Multipliers (U.S. Customary and Metric Units)

Multiplier	**Metric**	**U.S. Customary**
Load Constant (LC)	23	51
Horizontal Multiplier (HM)	$\left(\frac{25}{H}\right)$	$\left(\frac{10}{H}\right)$
Vertical Multiplier (VM)	$1-(0.003\,\lvert V-75\rvert)$	$1-(0.0075\,\lvert V-30\rvert)$
Distance Multiplier (DM)	$0.82+\left(\frac{4.5}{D}\right)$	$0.82+\left(\frac{1.8}{D}\right)$
Asymmetric Multiplier (AM)	$1-(0.0032\,A)$	$1-(0.0032\,A)$
Frequency Multiplier (FM)	From Table 2	
Coupling Multiplier (CM)	From Table 3	

Table 2: Frequency Multiplier Table (FM)

Frequency (Lifts/min)	**Work Duration**					
	$\leq$ 1 Hour		$>$ 1 but $\leq$ 2 Hours		$>$ 2 but $\leq$ 8 Hours	
	$V<30$	$V\geq 30$	$V<30$	$V\geq 30$	$V<30$	$V\geq 30$
≤ 0.2	1.00	1.00	0.95	0.95	0.85	0.85
0.50	0.97	0.97	0.92	0.92	0.81	0.81
1	0.94	0.94	0.88	0.88	0.75	0.75
2	0.91	0.91	0.84	0.84	0.65	0.65
3	0.88	0.88	0.79	0.79	0.55	0.55
4	0.84	0.84	0.72	0.72	0.45	0.45
5	0.80	0.80	0.60	0.60	0.35	0.35
6	0.75	0.75	0.50	0.50	0.27	0.27
7	0.70	0.70	0.42	0.42	0.22	0.22
8	0.60	0.60	0.35	0.35	0.18	0.18
9	0.52	0.52	0.30	0.30	0.15	0.15
10	0.45	0.45	0.26	0.26	0.13	0.13
11	0.41	0.41	0.20	0.23	0.00	0.00
12	0.37	0.37	0.00	0.21	0.00	0.00
13	0.34	0.34	0.00	0.00	0.00	0.00
14	0.00	0.28	0.00	0.00	0.00	0.00
15	0.00	0.28	0.00	0.00	0.00	0.00
>15	0.00	0.00	0.00	0.00	0.00	0.00

[1] Values of V are in inches.

[2] For lifting less frequently than once per 5 minutes, set $F = 0.2$ lifts/min.

Table 3: Coupling Multiplier (CM)

Coupling Type	**Coupling Multiplier**	
	$V < 30$ in (75 cm)	$V \geq 30$ in (75 cm)
Good	1.00	1.00
Fair	0.95	1.00
Poor	0.90	0.90